⚠

LQJ

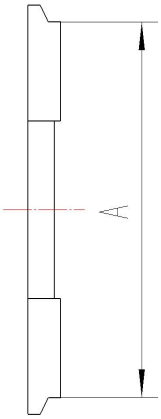
A

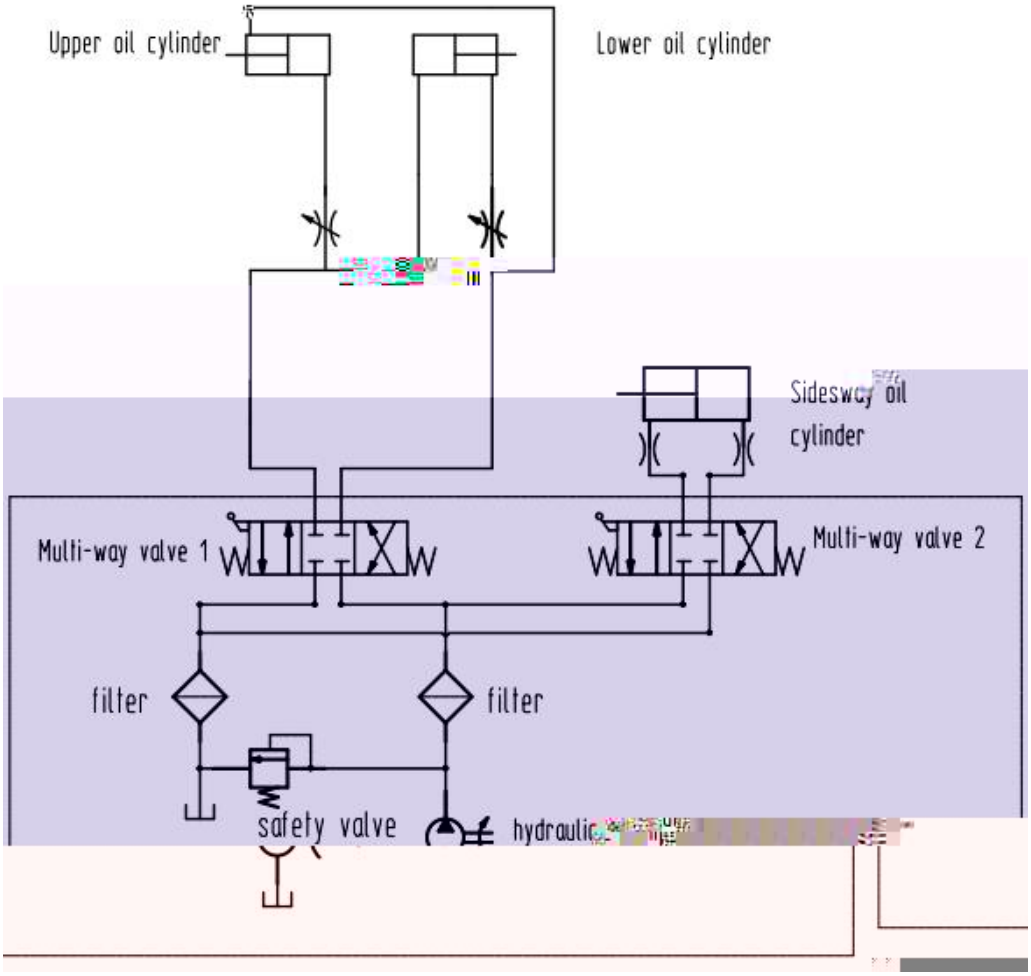
Upper oil cylinder
Lower oil cylinder
Sideway oil cylinder
Multi-way valve 1
Multi-way valve 2
filter
filter
safety valve
hydraulic

multiway